YINGJIAO®

YEL35 SERIES 35W



YEL35 series are designed with lower profile housing and for wide range AC input from 90VAC to 264VAC.

In addition to the high efficiency,Delivering an extremely low no load power consumption. the design of metallic mesh case enhances the heat dissipation.

The good performance can be used for industrial automation & control systems, varied equipments etc.

Features

- Universal AC Input/ Full Range
- Cooling by free air convection
- High operating temperature up to 70 ℃
- Higher Efficiency/Low Power Dissipation
- Protection:Short Circuit/Overload/ Over Voltage
- Three Years Warranty

YINGJIAO®

Model Information

Yingjiao Part Number	DC Voltage	Rated Current	Rated Power	VOLTAGE ADJ.RANGE	Max.Capacitive Load
YEL35-5	5V	7A	35W	4.5~5.5V	8000uF
YEL35-12	12V	3A	36W	10.2~13.8V	1500uF
YEL35-15	15V	2.4A	36W	13.5~18V	1000uF
YEL35-24	24V	1.5A	36W	21.6~28.8V	750uF
YEL35-36	36V	1A	36W	32.4~39.6V	470uF
YEL35-48	48V	0.8A	38.4W	43.2~52.8V	220uF

Input

VOLTAGE RANGE	90-264VAC/127-370VDC	
FREQUENCY RANGE	47-63Hz	
AVERAGE EFFICIENCY(115/230VAC)	83%	YEL35-5
	86%	YEL35-12
	88%	YEL35-15
	88%	YEL35-24
	89%	YEL35-36
	90%	YEL35-48
AC CURRENT(Typ.)	0.8A/115VAC	
	0.5A/230VAC	
INRUSH CURRENT(Typ.)	COLD START 25A/115VAC,45A/230VAC	
LEAKAGE CURRENT	<0.75mA/240VAC	

Output

RIPPLE & NOSE(max.)	80mVp-p	YEL35-5
	120mVp-p	YEL35-12
	120mVp-p	YEL35-15
	150mVp-p	YEL35-24
	200mVp-p	YEL35-36
	200mVp-p	YEL35-48
VOLTAGE TOLERANCE	±2.0%	YEL35-5
	±1.0%	YEL35-12
	±1.0%	YEL35-15
	±1.0%	YEL35-24
	±1.0%	YEL35-36
	±1.0%	YEL35-48
LINE REGULATION	±0.5%	
LOAD REGULATION	±1.0%	YEL35-5
	±0.5%	YEL35-12
	±0.5%	YEL35-15
	±0.5%	YEL35-24
	±0.5%	YEL35-36
	±0.5%	YEL35-48
MINIMUM LOAD	0%	
STAND-BY POWER CONSUMPTION	0.3W	
SETUP TIME	1000ms/230VAC at full load	
	2000ms/115VAC at full load	
RISE TIME	30ms/230VAC at full load	
	30ms/115VAC at full load	
HOLD UP TIME (Typ.)	30ms/230VAC at full load	
	12ms/115VAC at full load	

Protection

SHORT CIRCUIT	Protection type: Hiccup mode, recovers automatically
	after fault condition is removed
OVER LOAD	110%-150% Rated Output Power
	Protection type:Rated load, the load can be automatically restored
	after abnormal conditions are removed
OVER VOLTAGE	5V:5.75~6.75V
	12V:13.8~16.2V
	15V:18.75~21.75V
	24V:28.8~33.6V
	36V:41.4~48.6V
	48V:55.2~64.8V
	Protection type : Shut down o/p voltage, re-power on to recover

Environment

WORKING TEMP.	-30 ℃ to +70 ℃ (Refer to "Derating Curve")
Working Humidity	20 ~ 90% RH Non-Condensing
STORAGE TEMP, HUMIDITY	-40℃ ~+85℃,10 ~ 95% RH non-condensing
TEMP. COEFFICIENT	± 0.03%/℃(0~50℃)
SAFETY PROTECTION	CLASS I
VIBRATION	10~ 500Hz, 5G 10min./1cycle, 60min. each along X, Y,Z axes
OVER VOLTAGE CATEGORY	III; According to BS EN/EN61558, BS EN/EN50178,
	BS EN/EN60664-1,BS EN/EN62477-1;
	altitude up to 2000 meters
MTBF	600K hrs min. MIL-HDBK-217F (25℃)

YINGJIAO®

SAFETY & EMC

SAFETY STANDARDS	BS EN/EN62368-1, BS EN/EN60335-1, BS EN/EN61558-1
WITHSTAND VOLTAGE	I/P-O/P:4KVAC/min, I/P-FG:2KVAC/min,O/P-FG:1.25KVAC/min
ISOLATION RESISTANCE	I/P-O/P, I/P-FG, O/P-FG:100M Ohms/ 500VDC/25 °C/70% RH
EMC EMISSION	Compliance to BS EN/EN55032 (CISPR32) Class B,
	BS EN/EN61000-3-2,-3,Class A
EMC IMMUNITY	Compliance to BS EN/EN61000-4-2,3,4,5,6,8,perf.CriteriaA
	BS EN/EN61000-4-11,perf.CriteriaA,BS EN/EN55035

Note

1.All parameters NOT specially mentioned are measured at 230vAC input, rated load and 25℃ of ambient temperature.

2.Ripple & noise are measured at 20MHz of bandwidth by using a 12" twisted pair-wire terminated with a 0.1uf & 47uf parallel capacitor.

3.Tolerance : includes set up tolerance, line regulation and load regulation.

4.Line regulation is measured from low line to highline at rated load.

5. Load regulation is measured from 0% to 100% rated load.

6.Length of set up time is measured at cold first start. Turning ON/OFF the power supply very quickly may lead to increase of the set up time.

7.The ambient temperature derating of 5℃/1000m is needed for operating altitude greater than 2000m(6500ft).

8.The power supply is considered a component which will be installed into a final equipment.

All the EMC tests are been executed bymounting the unit on a 360mm*360mm metal plate with 1mm of thickness.

The final equipment must be re-confirmed that it still meets EMC directives.

9.The out case needs to be connected to the earth ⏚ ,of system when the terminal equipment in operating.

Dimensions & Weight

Length:	99mm/3.89in
Width:	82mm/3.22in
Height:	30mm/1.18in
Weight:	230g

Packing

Carton Size:	36 × 32.5 x 18.5 CM
	14.17 x 12.80 x 7.28 in
Master Carton Quantities:	60pcs/Carton

Dimensions and Installation

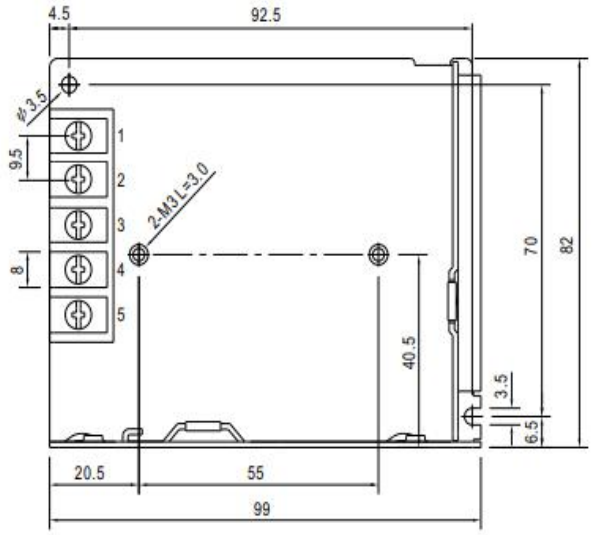

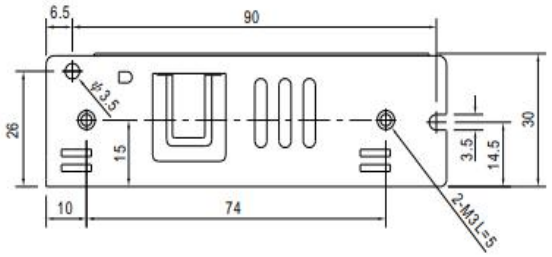

Input

No.	Description
1	AC/L
2	AC/N
3	FG ⏚

Output

No.	Description
4	DC OUTPUT -V
5	DC OUTPUT +V

Screw Spec.	L(max)	Torque(max)
M3	5mm	0.4N·m
M3	3mm	0.4N·m

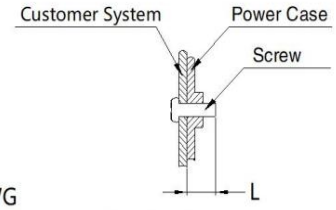

Note:
Unit: mm[inch]
Wire range: 22-12AWG
Connector tightening torque: M3.5 , 0.8N·m
General tolerances: ± 1.00[± 0.039]

Block Diagram

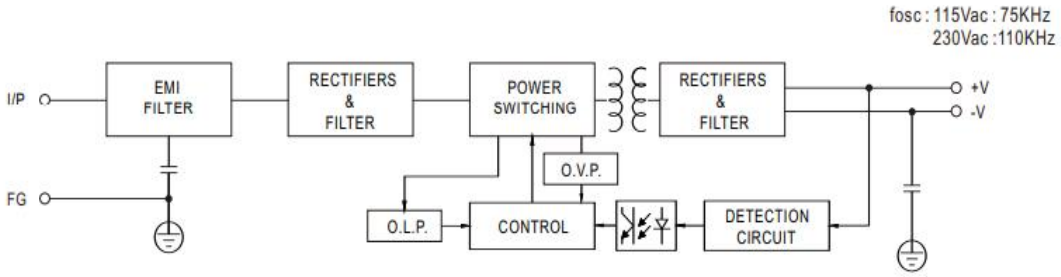

Deduction curve and temperature

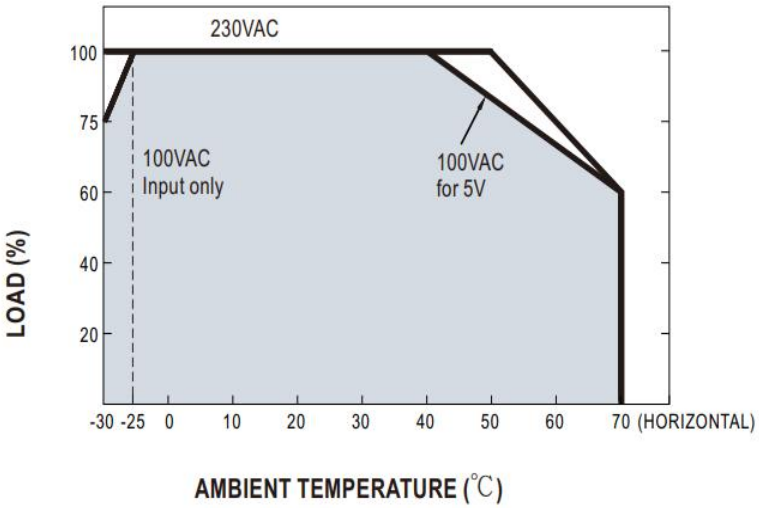

Minus output and input voltage curves

